J&H LED
A Division of Littles and Associates, LLC

12345 Pauls Valley Rd, Ste A-3
Austin, TX 78737
512-840-0616
sales@jandhled.com

www.jandhled.com/post-lights/jh-apl80w-27r

LED Pole Light XL

PRODUCT DESCRIPTION

LED pole fixtures can mount on existing 3” poles as an upgrade to current lighting. They are perfect for illuminating a variety of outdoor applications, including pathways, landscapes, public places, retail and residential complexes, and parking lots. They are most popular for replacing acorn shaped lights.

Dimensions

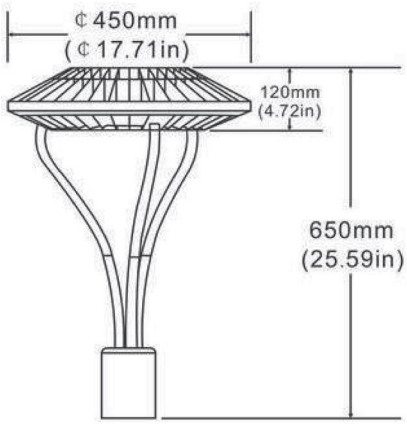

Specifications

Part Number	Input Power	Input Voltage	Efficiency	CCT Selectable	Light Distribution	CRI	Certificates	Warranty
JH-APL60W-27R	60W	120-277VAC	120Lm/W	3k/4k/5k	120°	70+	ETL	5 Years
JH-APL80W-27R	80W	120-277VAC	120Lm/W	3k/4k/5k	120°	80+	ETL	5 Years
JH-APL100W-27R	100W	120-277VAC	120Lm/W	3k/4k/5k	120°	70+	ETL	5 Years
JH-APL120W-27R	120W	120-277VAC	120Lm/W	3k/4k/5k	120°	70+	ETL	5 Years
JH-APL150W-27R	150W	120-277VAC	120Lm/W	3k/4k/5k	120°	70+	ETL	5 Years
JH-APL180W-27R	180W	120-277VAC	120Lm/W	3k/4k/5k	120°	70+	ETL	5 Years
JH-APL200W-27R	200W	120-277VAC	120Lm/W	3k/4k/5k	120°	70+	ETL	5 Years
JH-APL240W-27R	240W	120-277VAC	120Lm/W	3k/4k/5k	120°	70+	ETL	5 Years