J&H LED
A Division of Littles and Associates, LLC

12345 Pauls Valley Rd, Ste A-3
Austin, TX 78737
512-840-0616
sales@jandhled.com

www.jandhled.com/wall-packs/jh-rwpgw-52b

Downlight Wall Pack Light



PRODUCT DESCRIPTION

This Downlight LED Wall Pack Light is crafted to illuminate outdoor spaces with precision and style. Its compact design seamlessly integrates into any architectural setting, delivering bright and uniform lighting. Ideal for various applications such as building entrances, pathways, and perimeter lighting, this downlight LED wall pack light is a dependable choice to enhance the safety and aesthetics of your outdoor environment.

Dimensions

JH-RWPGW-52A

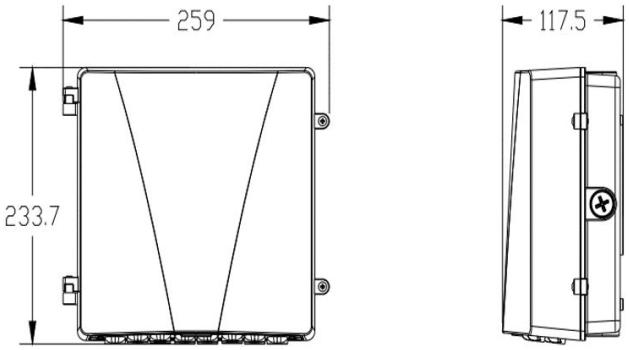

JH-RWPGW-52B

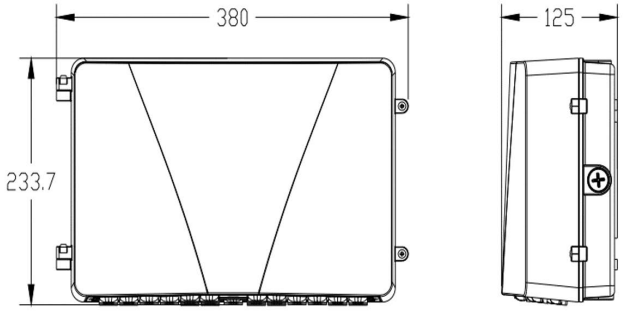

All Measurement in mm

Specifications

Part Number	Watt Selectable	Input Voltage	Efficiency	CCT Selectable	Light Distribution	CRI	Certificates	Warranty
JH-RWPGW-52A	25/19/13W	120 - 277V	130 L/W	27/40/50K	Type III	>70	ETL	5 Years
JH-RWPGW-52B	55/41/28W	120 - 277V	130 L/W	27/40/50K	Type III	>70	ETL	5 Years