J&H LED
A Division of Littles and Associates, LLC

12345 Pauls Valley Rd, Ste A-3
Austin, TX 78737
512-840-0616
sales@jandhled.com

www.jandhled.com/pole-lights/jh-sbs150w-82f

LED Pole Light

Intertek

PRODUCT DESCRIPTION

This light's cutting- edge optical design provides superior illumination and precision glare control. The unique cooling channel design promotes efficient heat dissipation and ensures a longer lifespan whether you have a new construction or upgrade application.

APPLICATIONS: Parking lots, driveways, and roadways

ACCESSORIES *(SOLD SEPARATELY)*

Slip Fitter Bracket
JH-SBSBR-82F

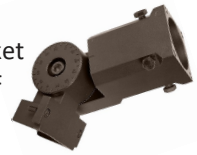

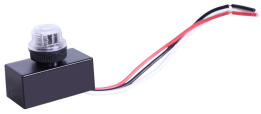

Photocell
JH-PCAW-27R

Dimensions

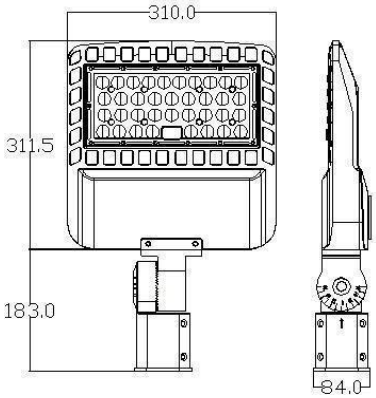

100W

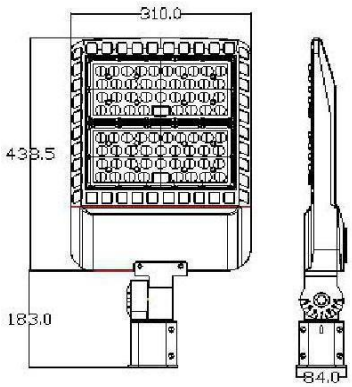

150W/200W

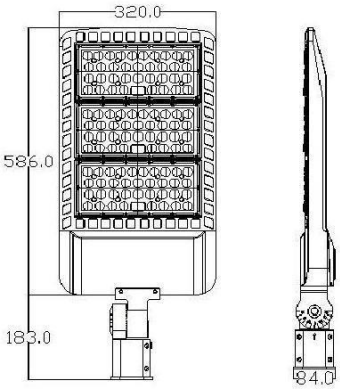

240W/320W

All dimensions in millimeters

Specifications

Part Number	Input Power	Input Voltage	Efficiency	CCT	Light Distribution	CRI	Certificates	Warranty
JH-SBS100W-82F	100W	120-277V	120Lm/W	2.7/4/5K	Type III	70+	ETL	5 Years
JH-SBS150W-82F	150W	120-277V	120Lm/W	2.7/4/5K	Type III	70+	ETL	5 Years
JH-SBS200W-82F	200W	120-277V	120Lm/W	2.7/4/5K	Type III	70+	ETL	5 Years
JH-SBS240W-82F	240W	120-277V	120Lm/W	2.7/4/5K	Type III	70+	ETL	5 Years
JH-SBS320W-82F	320W	120-277V	120Lm/W	2.7/4/5K	Type III	70+	ETL	5 Years